By Mick Gulovsen
17-May-2014 Ver. 3

Mick's uMite PCB (MuP) Ver. 2

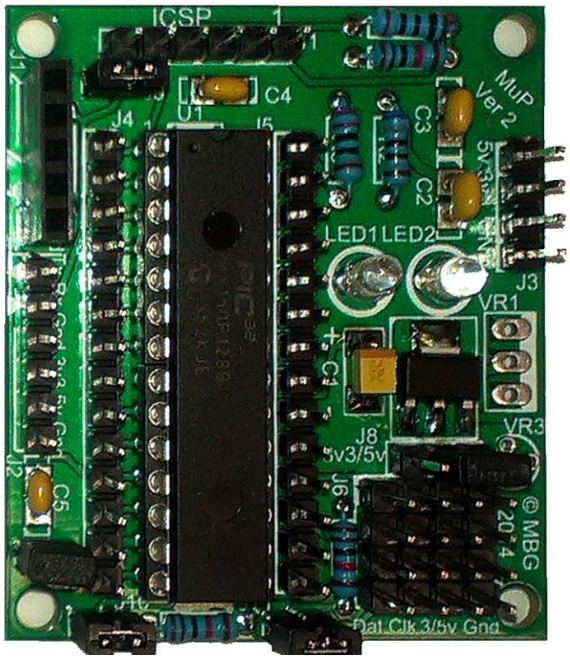

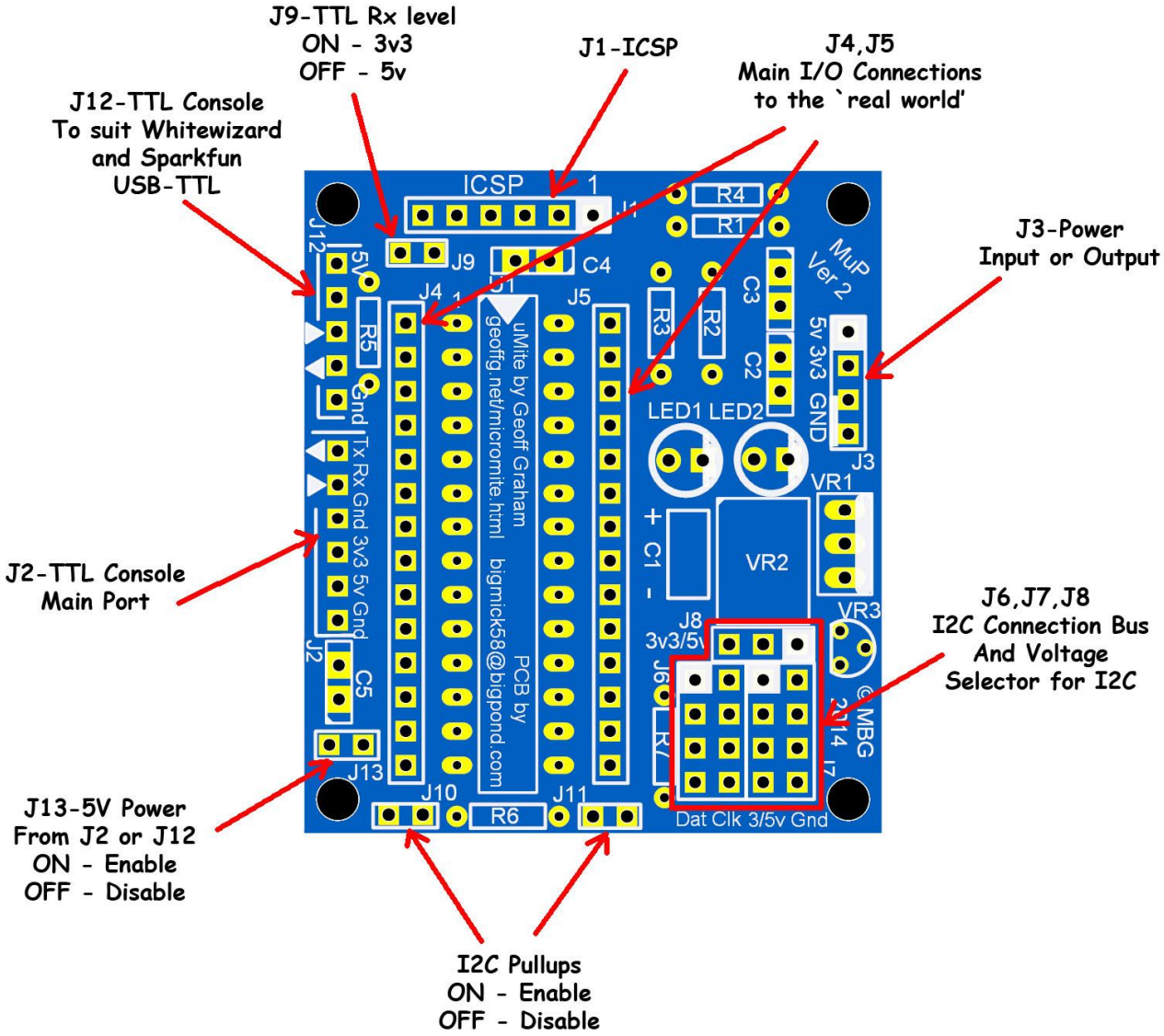

Board Concept.

Full hardware design for the MicroMite (uMite) project can be found here:

http://geoffg.net/micromite.html

The Mick uMite PCB (from here on called MuP) was originally designed for my own purposes as a final stage PCB after a project has been developed on a prototype, or bread/Vero board. Two great fully optioned uMite PCBs can be found on the `Back Shed Forums' designed by WhiteWizard (44pin proto.) and Zonker (a 28pin proto.), both of these PCBs are well designed and have on-board USB to TTL interfaces to facilitate communication with a PC. Further information can be found in the forums located here:

Zonker's 28pin
http://www.thebackshed.com/forum/forum_posts.asp?TID=6271&PN=1

WhiteWizard's 44pin
http://www.thebackshed.com/forum/forum_posts.asp?TID=6289&PN=8

MuP is `minimalist' by design!

After the hard work has been done I expect the uMite to be installed in some hidden, `out of the way' cabinet merrily doing its job never to be disturbed again. There would be no need for a USB to TTL communication interface and I have designed it to be powered by a relatively cheap USB plug pack (wall wart) 1A 5Vdc input (3v3 is generated on-board), size and cost being my main goals. MuP is only 49.5mm x 43.2mm (1.95" x 1.70").

MuP Version 2

MuP Ver.2 has strayed a little bit from the `*Minimalist* ' perspective but I feel that the enhancements have made MuP Ver.2 a considerably better product.

MuP Ver.2 is the same physical size as its predecessor, the differences from Ver.1 are covered in the next section.

Version 2. Differences

MuP Ver.1 was pretty popular but there were a couple of areas that needed to be addressed that enabled me to implement a few improvements to Mup. These include:

1.

Pullups for the I^2C lines Dat & Clk with link options (J10,J11) to enable or disable them.

2.

The addition of a 1k resistor to enable 5V TTL level Tx(in) to be used, this can be jumpered out (J9) if 3v3 TTL Tx(in) is to be used.

3.

Fixed a silk screen overlay error that had the Clk and Dat labels for I^2C reversed.

4.

Added a new header location (J12) to support WhiteWizard's USB module.

Sparkfun has a USB-TTL module that could be used here but it has only 4 pins (J12 is a 5 pin header) and is missing the 5V so cannot supply power to MuP V2.
Further information can be found at: www.sparkfun.com

5.

Added a Jumper (J13) to enable or disable 5V from the USB-TTL module inputs (J2 & J12). If MuP V2 is being supplied power through J3 AND a USB-TTL cable or adapter that has a 5V supply is connected, then J13 needs to be removed so that the two power sources will not `fight' with each other. If 5V Power is required to be supplied via J2 or J12 then the jumper J13 will need to be installed.

Schematic.

NOTE!
The `**physical**' pin numbering shown In this schematic does not reflect the actual `**physical'** pin numbering of the PIC32MX150F128B.

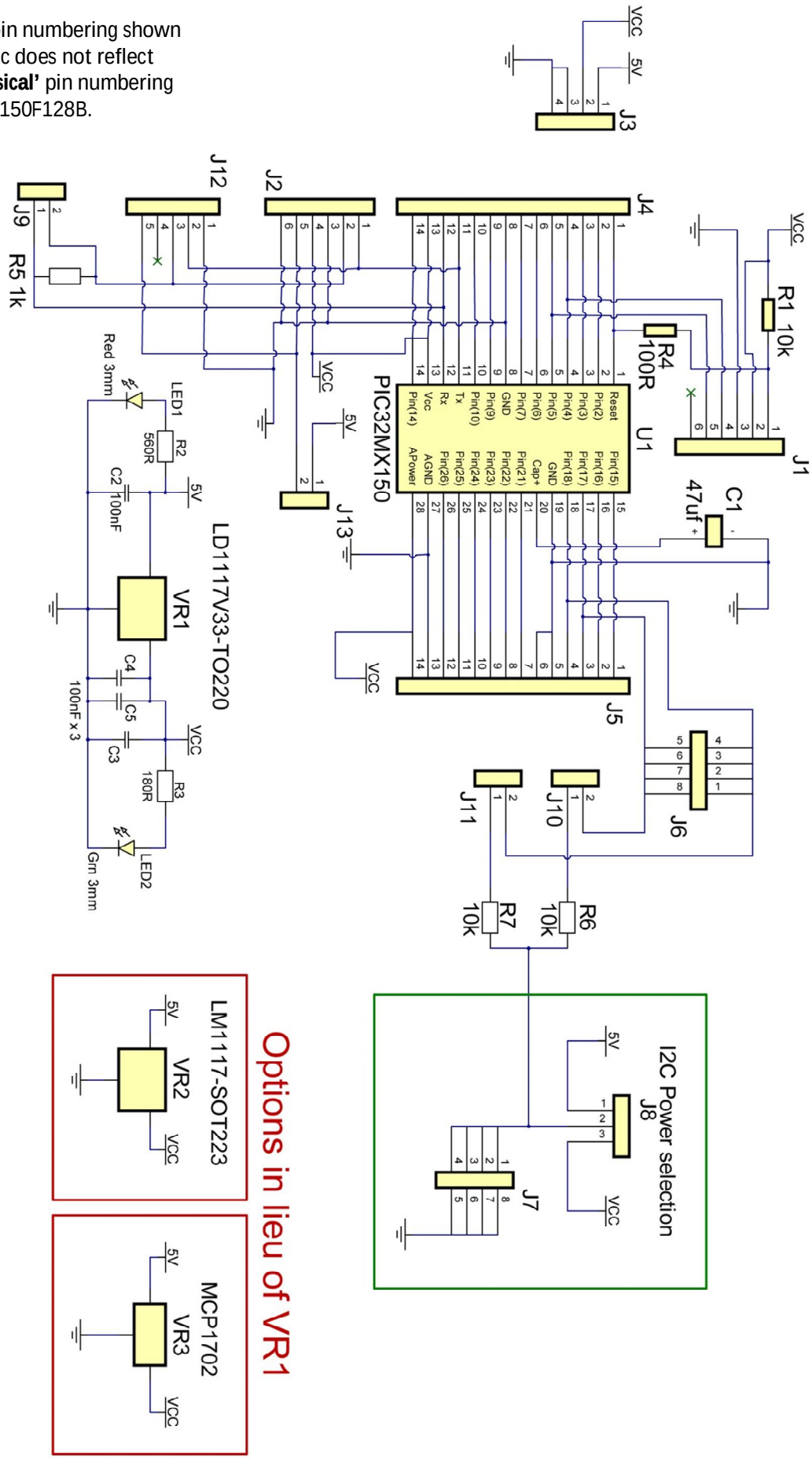

Bill of Materials

Ref.	Type	Description	Comments
C1	47uf 6v3	Tantalum SMD Low ESR	Should be a Surface mount device
C2	100nF	0.1" Monolithic	
C3	100nF	0.1" Monolithic	
C4	100nF	0.1" Monolithic	
C5	100nF	0.1" Monolithic	
J1	6pin Header	Male	
J2	6pin Header	Male	
J3	4pin Header	Male	
J4	14pin Header	Male or Female	User choice Male or Female
J5	14pin Header	Male or Female	User choice Male or Female
J6	4pin Header	Male	
J7	4pin Header	Male	
J8	3pin Header	Male	
J9	2pin Header	Male	
J10	2pin Header	Male	
J11	2pin Header	Male	
J12	5pin Header	Female	
J13	2pin Header	Male	
LED1	Red 3mm	5V indicator	
LED2	Green 3mm	3v3 indicator	
R1	10k 0.25w	1/4 W 5%	
R2	560R 0.25w	1/4 W 5%	
R3	180R 0.25w	1/4 W 5%	
R4	100R 0.25w	1/4 W 5%	
R5	1k 0.25w	1/4 W 5%	
R6	10k 0.25w *	1/4 W 5%	10k for 100kHz I^2C, 2k for 400kHz
R7	10k 0.25w *	1/4 W 5%	10k for 100kHz I^2C, 2k for 400kHz
U1	PIC32MX150F128B-I/SP	Main CPU	
VR1	LD1117V33-TO220	3v3 Voltage Regulator	ONLY one Vreg to be installed
VR2	LM1117-SOT223	3v3 Voltage Regulator	ONLY one Vreg to be installed
VR3	MCP1702	3v3 Voltage Regulator	ONLY one Vreg to be installed

28 Pin Micromite Connections

(reprinted, with kind permission by Geoff Graham)

The following diagram shows the possible functions of each I/O pin on the Micromite.

Note that the physical pins on the chip and the pin numbers used in MMBasic are the same. This means that nine pins are not available in MMBasic as they are dedicated to functions such as power and ground. These pins are highlighted in grey in the diagram.

RESET Wired to +V directly or via 10K resist				1	28	*ANALOG POWER (+2.3 to +3.6V)*		
	DIGITAL	INT	ANALOG	2	27	*ANALOG GROUND*		
SPI OUT	DIGITAL	INT	ANALOG	3	26	ANALOG	DIGITAL	PWM 2A
PWM 1A	DIGITAL	INT	ANALOG	4	25	ANALOG	DIGITAL	SPI CLOCK
PWM 1B	DIGITAL	INT	ANALOG	5	24	ANALOG	DIGITAL	PWM 2B
PWM 1C	DIGITAL	INT	ANALOG	6	23	ANALOG	DIGITAL	
COM1: ENABLE	DIGITAL	INT	ANALOG	7	22	DIGITAL	5V	COM1: RECEIVE
			GROUND	8	21	DIGITAL	5V	COM1: TRANSMIT
	COM2: TRANSMIT	INT	DIGITAL	9	20	*47µF TANT CAPACITOR (+)*		
	COM2: RECEIVE	INT	DIGITAL	10	19	*GROUND*		
			CONSOLE Tx (DATA OUT)	11	18	DIGITAL	5V	COUNT	I^2C DATA
			CONSOLE Rx (DATA IN)	12	17	DIGITAL	5V	COUNT	I^2C CLOCK
			POWER (+2.3 to +3.6V)	13	16	DIGITAL	5V	COUNT	WAKEUP	IR
	SPI IN	5V	DIGITAL	14	15	DIGITAL	5V	COUNT

The notation is as follows (the mnemonic in brackets is the mode used in the SETPIN command):

ANALOG	These pins can be used to measure voltage (AIN).
DIGITAL	Can be used for digital I/O such as digital input (DIN), digital output (DOUT) and open collector output (OOUT).
INT	Can be used to generate an interrupt (INTH, INTL and INTB).
COUNT	Can be used to measure frequency (FIN), period (PIN) or counting (CIN).
5V	These pins can be connected to 5V circuits. All other I/O pins are strictly 3.3V maximum.
COM *xxx*	These are used for serial communications (see Appendix A)
I^2C *xxx*	These are used for I^2C communications (see Appendix B)
SPI *xxx*	If SPI is enabled these pins will be used for SPI I/O (see Appendix D)
PWM *xxx*	PWM or SERVO output (see the PWM and SERVO commands)
IR	This can be used to receive signals from an infrared remote control (see the IR command)
WAKEUP	This pin can be used to wake the CPU from a sleep (see the CPU SLEEP command).

Build Options.

Power:

MuP has provision for an on-board 3v3 Regulator so only needs to be supplied with 5Vdc, whilst I have allowed an option of 3 types of 3v3 Regulators for MuP, ***ONLY ONE*** should ever be installed otherwise they would work against each other and possibly oscillate affecting the quality of the 3v3 rail.

If you wish, MuP can be powered via a USB-TTL adapter that has a 3v3 output, (or any other 3v3 source), however power draw `could' be limited and I would recommend not fitting the LEDs to minimise current draw. This is **NOT** my preferred way to power MuP V2.

If you intend to power the MuP via a 3v3 supply (eg. via a USB-TTL adapter), the voltage Regulator (Vr1, Vr2 or Vr3) should NOT be fitted. The intended locations to supply 5v input is via header J2 or J3.

I recommend male header pins for J1, J2, J3, J6, J7, J8, J9, J10, J11 & J13 and a female header for J12. Headers J4 and J5 may be either male or female depending on your own preferences, as these are the connection points for the `outside world' and will vary depending on the environment MuP is to be used in.

Connections.

J1 (ICSP)

This is the ICSP header for connection to a PICKIT3 to program a new firmware into the Pic32.

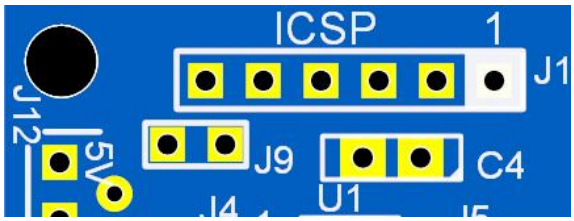

J2, J12 (Console Inputs)

These are primarily to connect to a USB-TTL serial adapter but can also accept **3v3** (ONLY J2) and/or **5v** POWER inputs.

NOTE! Do NOT connect 3v3 ***from*** an external source if any of the Voltage Regs (VR1 - VR3) are fitted.

J2

J12

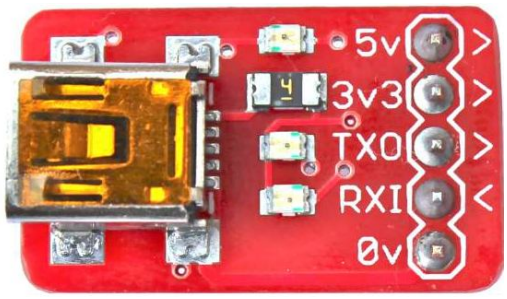

WhiteWizard's USB Module Plugs directly into J12
For more details see:
http://micromite.org/shop/development-tools/usb-to-serial-module/

Generally, this is a 3 wire connection Tx, Rx & Gnd (if MuP is powered via J3) to an external USB to TTL adapter for communication with a PC but it may be convenient to use J2 or J12 as the entry point for the power supply as well. A classic example is when using a USB-Serial Cable similar to this unit available from DONTRONICS.COM

https://www.shop-dontronics.com/ftdi-usb-to-serial-ttl-level-3.3v-converter-cable

See APPENDIX A at the end of this document for more details on this cable.

J2 and J12 may be used to supply 5V to the MuP, if no other supply is connected to J3, I have provided an isolation jumper (J13) to connect or disconnect the 5V supply from J2 and J12.

J2 may also be used to supply 3v3 power (there is no connection for 3v3 on J12) but care should be taken that there are no other power sources and that none of the Vregs (VR1-3) are fitted, this is NOT my preferred option for powering the MuP.

J3 (Power)

This is primarily a power inlet (or outlet) port.

J3

NOTE! Do NOT connect 3v3 ***from*** an external source if any of the Voltage Regs. (VR1 - VR3) are fitted.

J4, J5

Pictures not shown but are direct connections to the adjacent pins of the Pic32mx150 chip with the one exception of **J5** pin 6 (would equate to Pic pin 20) as Pic pin 20 is the +ve for the cap at C1 and should have no other connections to it, so this pin is connected to Gnd instead.

These are the main connection points for interfacing to the `outside world'. Solder Male or Female headers to these position as suits your application.

J6, J7, J8

These are designed for use with I^2C devices.
The left hand column (4 vertical pins) of **J6** all connect to the **Data** for I^2C communication.
The right hand column (4 vertical pins) of **J6** all connect to the **Clock** for I^2C communication.
The left hand column (4 vertical pins) of **J7** all connect to **3v3** or **5V**, depending on **J8** setting.
The right hand column (4 vertical pins) of **J7** all connect **Gnd**.
J8 is for a jumper to select if the left hand column of pins of **J7** are **5V** (link pin 1&2) or **3v3** (link pin 2&3).

This allows up to four I^2C devices to be easily connected to the MuP via a 4 pin header to pick up the Dat/Clk/Power/Gnd signals.

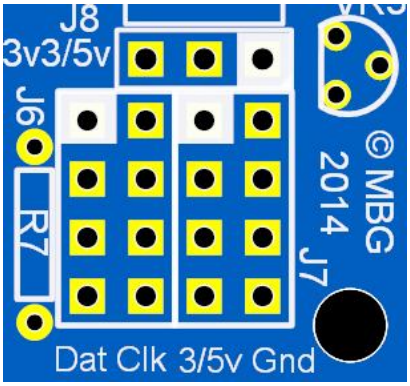

Console Rx (in) J9 & R5

The TTL console Interface (J2) `Rx' is connected to Pin 12 of the PIC32 chip. This pin is NOT 5V tolerant and needs a 1k Ohm resistor between J2 pin (Rx) and U1 pin 12. This enables a 5V TTL (USB to TTL serial) input to directly connect without risking the Pic32's input circuitry.

I have provided for this resistor (R5) and an associated Jumper block (J9). If you wish to use a USB to Serial adapter designed for 3v3 TTL levels Then J9 should have a jumper link fitted, if using a 5V TTL level input you will need to *REMOVE* the link on J9.

I^2C Pullups (R6,R7 & J10, J11)

I have provided for the provision of pull-up resistors for the I^2C headers on the MuP, these would not normally be fitted if you are using Pin(17) or Pin(18) for other purposes as they may affect the performance of these pins.

If you wish to use I^2C the Jumpers to enable these (J10 & J11) need to be installed, If not using I^2C REMOVE the jumpers.

If you do wish to use I^2C, Geoff suggests the following values for R6 & R7:

10KΩ for 100KHz
or
2KΩ for 400 kHz

APPENDIX A

If you wish to use one of the FTDI 3v3 cables similar to the ones available from *DONTRONICS.COM*

https://www.shop-dontronics.com/ftdi-usb-to-serial-ttl-level-3.3v-converter-cable

You will have to modify the pinout of the female header as shown below..

Original Pinout

Modified Pinout

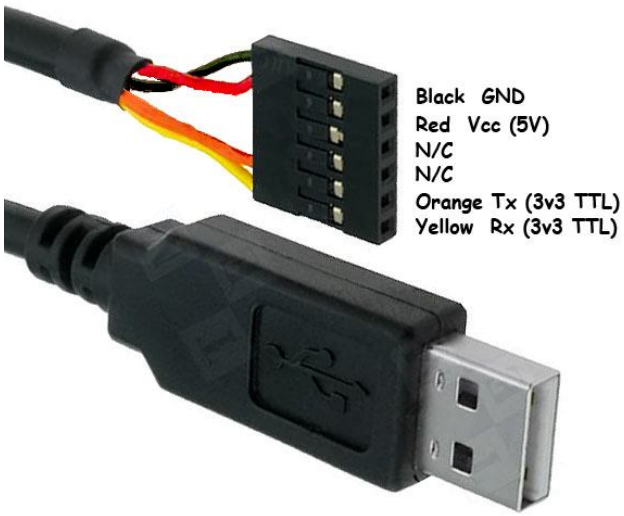

The Green (RTS) and Brown (CTS) wires may be simply cut off or taped back out of the way so that they don't short with other connections.

It is a very simple process to remove a wire from the plastic connector, simply use a sharp blade to gently lift the small plastic locking tab and pull the terminal out of the connector. To fit a terminal into another position simply push it in until it clicks.