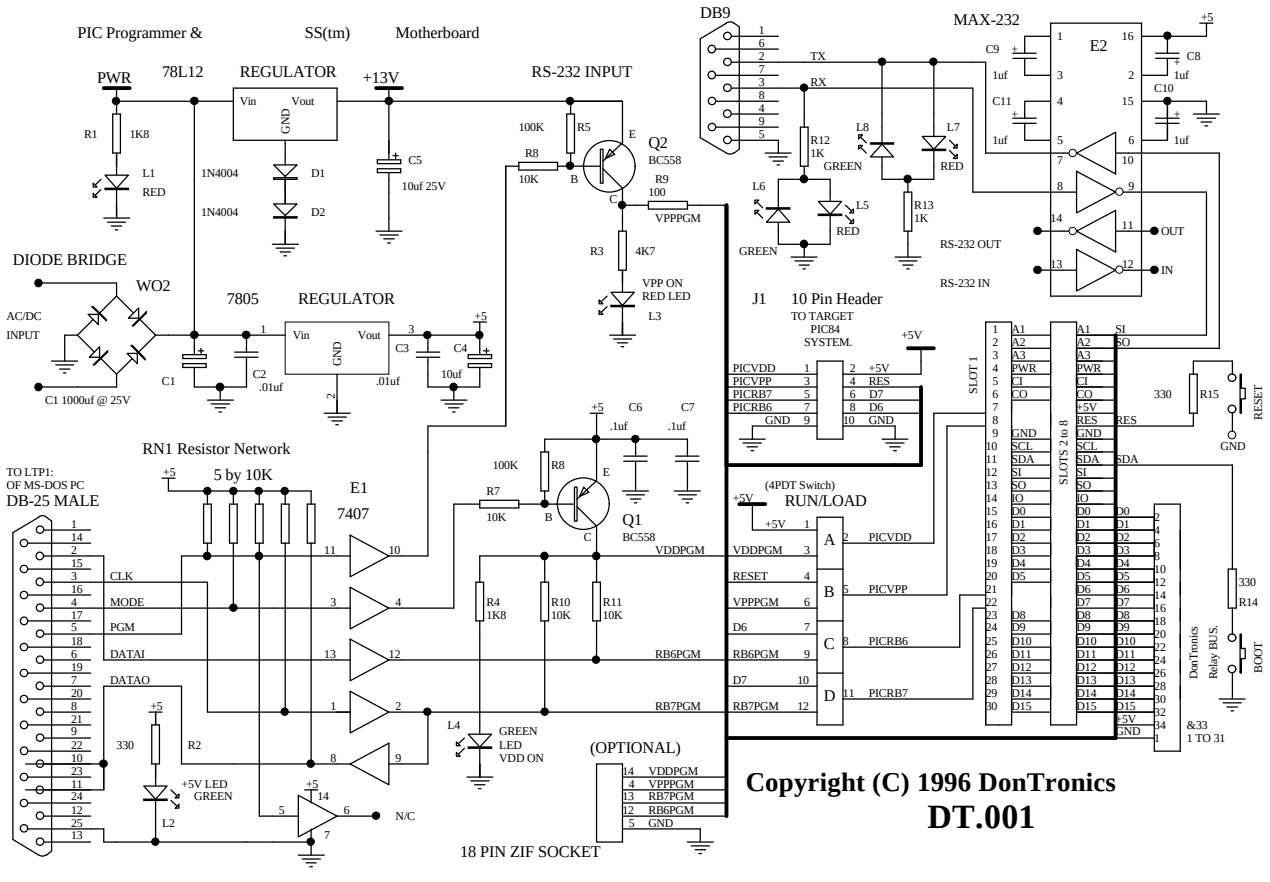
PIC Programmer &
SS(tm)
Motherboard
PWR
78L12
REGULATOR
Vin
Vout
GND
+13V
RS-232 INPUT
R1
1K8
L1
RED
1N4004
D1
D2
C5
10uf 25V
100K
R5
R8
10K
B
E
C
Q2
BC558
R9
100
VPPPGM
R3
4K7
VPP ON
RED LED
L3
DIODE BRIDGE
WO2
AC/DC
INPUT
C1 1000uf @ 25V
C1
C2
.01uf
7805
REGULATOR
C3
.01uf
C4
10uf
RN1 Resistor Network
5 by 10K
TO LTP1:
OF MS-DOS PC
DB-25 MALE
CLK
MODE
PGM
DATAI
DATAO
E1
7407
R7
10K
Q1
BC558
C6
.1uf
C7
.1uf
VDDPGM
R4
1K8
R10
10K
R11
10K
RB6PGM
RB7PGM
L4
GREEN
LED
VDD ON
330
R2
+5V LED
GREEN
L2
N/C
(OPTIONAL)
18 PIN ZIF SOCKET
VDDPGM
VPPPGM
RB7PGM
RB6PGM
GND
DB9
TX
RX
R12
1K
L8
GREEN
L7
RED
L6
GREEN
L5
RED
R13
1K
RS-232 OUT
RS-232 IN
MAX-232
E2
C9
1uf
C11
1uf
C8
1uf
C10
1uf
OUT
IN
J1
10 Pin Header
TO TARGET
PIC84
SYSTEM.
PICVDD
PICVPP
PICRB7
PICRB6
GND
+5V
RES
D7
D6
GND
SLOT 1
SLOTS 2 to 8
330
R15
RESET
GND
(4PDT Switch)
RUN/LOAD
A
B
C
D
PICVDD
PICVPP
PICRB6
PICRB7
DonTronics
Relay BUS.
330
R14
BOOT
&33
1 TO 31
Copyright (C) 1996 DonTronics
DT.001